SUSTAINABLE DEVELOPMENT POLICY

Purpose, Scope and Impact

This policy establishes the processes through which **Talbot Design (Seale) Ltd, 52 Victoria Road, Aldershot, Hants, GU11 1SS**, the "Organisation", shall manage and control the impact it has on the environment in all it's activities.

The policy applies to all staff regardless of position or seniority, as well as to all approved and designated sub-contractors engaged by the Organisation.

SUSTAINABILITY DECLARATION

We are committed to being a responsible contractor and employer in the creation of buildings and environments in which they are built. Our goals are to sustain the environment whilst facilitating long-term wealth generation and enhancing the quality of life of the community in which we are working.

We will work with our client's and designers to consider the whole life impact of the project, minimising environmental damage and maximising business benefits.

During the construction of the building, we will fully comply with all applicable legislation, adopt appropriate innovative technology and review all construction processes to minimise waste and maximise materials from sustainable or recycled sources.

C J Talbot
Managing Director

SUSTAINABLE DEVELOPMENT POLICY

OBJECTIVES

The Company's objective is to ensure that the our construction expertise and knowledge is shared with the client and the designers through open and honest communication from the start, and use our value engineering experience to reduce the whole life environmental impact of the building for the community and for the business.

We achieve our objective by;

- Protecting the natural environment, biodiversity and heritage, in so far as practicable, on our sites and surrounding communities.

- Incorporate current and new legal requirements into our procedures and practises and discuss new environmentally friendly and sustainable products suitable for incorporation in our building with suppliers.

- Input into the design process, where appropriate, to ensure the maximum use of recycled or sustainable materials wherever possible in the building and landscape.

- Minimise the occurrence of waste on sites through efficient use of materials, re-use wherever possible and separation of waste for recycling or compliant disposal.

- Strong planning to ensure correct material ordering and safe storage whilst on site. Minimisation of supplier packaging and use of local suppliers and good logistical planning to reduce the traffic flow to and from the site.

- Maintain good relations with our site neighbours and keep them informed of any significant activities on site, which may temporarily affect them. Ensuring that any noisy plant or machinery is supplier muffled or attenuated suitably for the environment in which it is working.

- Ensuring the health and safety of those working on or visiting our site and the local community during construction.

We will continually monitor and evaluate our progress to achieving our objectives above. Continuous improvement is our goal and we will engage all new advancements and ideas in developing more environmentally friendly and sustainable buildings.

SUSTAINABLE / RENEWABLE CONSTRUCTION METHODS

We are all becoming more aware for the genuine need for renewable energy and sustainable building practices. Talbot Construction takes these matters seriously and has undertaken a number of projects that demonstrate a variety of these practices.

Rainwater Harvesting

We have installed rainwater harvesting on many projects throughout the country. The water generated being used for the flushing of toilets in the building. The adjacent schematic drawing is of a completed project in Newcastle value £2,700,000.

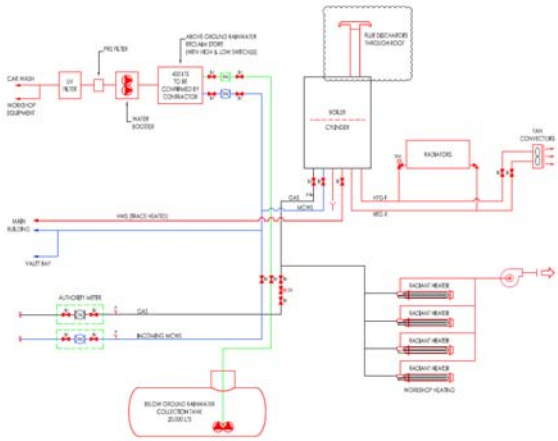

Biomass Boilers

At a project near London we are installing a biomass boiler. Whilst the Client was not too particular about this method of heating it was part of the process that achieved the BREEAM rating of 'excellent' that was required for this project. An 8-meter high hopper into which the 'fuel' is placed serves the biomass boiler. By means of an automatic transfer screw the recycled fuel, normally pellets, is channelled into the burners of the boiler creating heat for the water system.

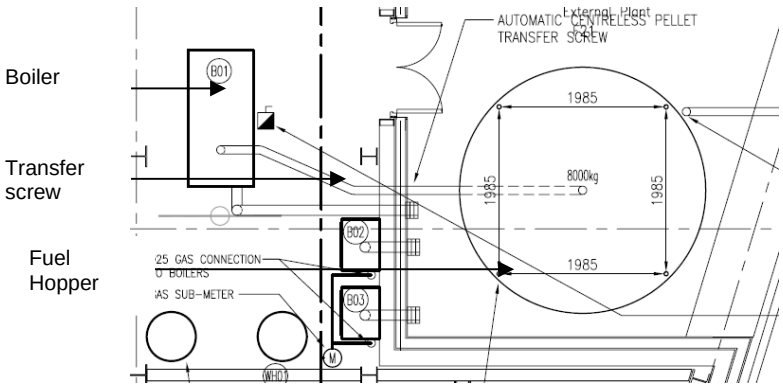

This project, at a value of £5,400,000, was one of two secured with this Client through competitive tendering.

The Client and the design team primarily drive the introduction of sustainable building practices and renewable energy. Talbot Construction, to assist this, is committed to a greater knowledge and understanding of these practices.

SUSTAINABLE / RENEWABLE CONSTRUCTION METHODS

Heat Exchange Systems

We are currently constructing a private residence where a heat exchanger is being utilised to draw heat from the spa/pool area to then transfer the heat to other areas of the property. This system reduces the overall heating costs and fuel use for the property.

In Ground Heat Source Pumps

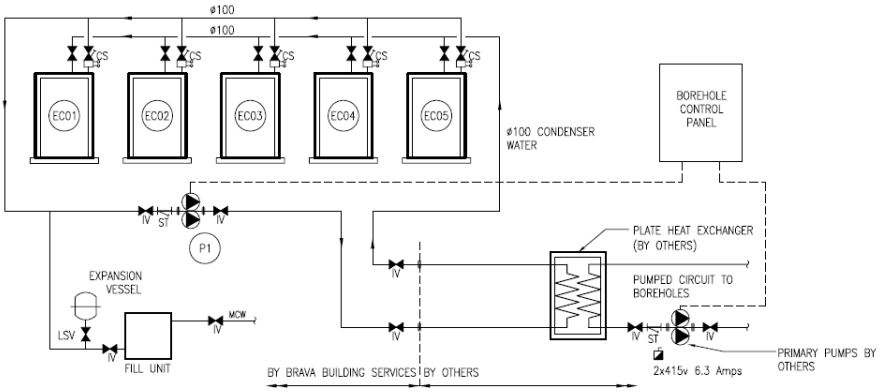

CONDENSER WATER SCHEMATIC – NTS

Utilising the grounds own supply of heat we have installed a looped ground heat system at a project in Croydon, South London.

Solar Powered Hot Water Heating

Benefiting form the orientation and siting of a project in Birmingham we were able to install solar heating panels on the roof of a new build project. This method of supplementary heating of the water reduces CO^2 footprint and fuel costs.

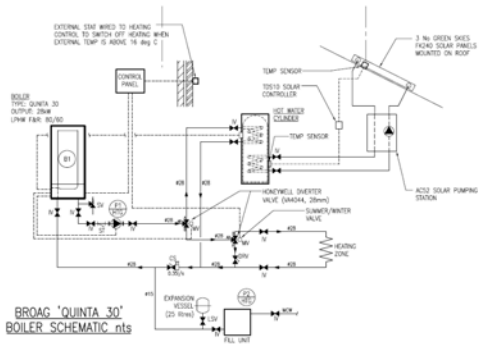

LED Lighting

Talbot Construction have an electrical division which is NICEIC registered. This department gives us and an advantage as a contractor to work with design teams looking for ways to reduce fuel costs. We are seeing more and more the use of LED lighting in premises. LED lighting gives long life equipment, with extremely low energy consumption.